SIGN	REVISION	DATE	BY
1	Renewal	111031	R. T
2	Renewal	160405	W. S

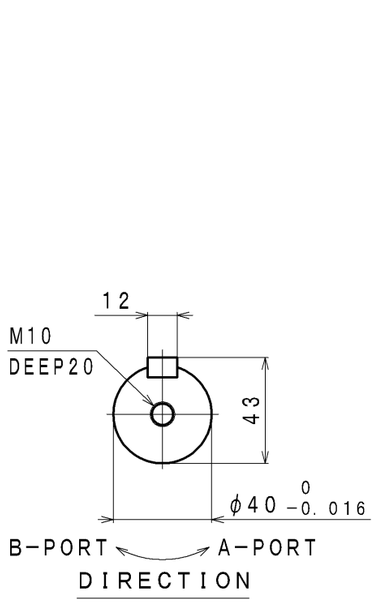

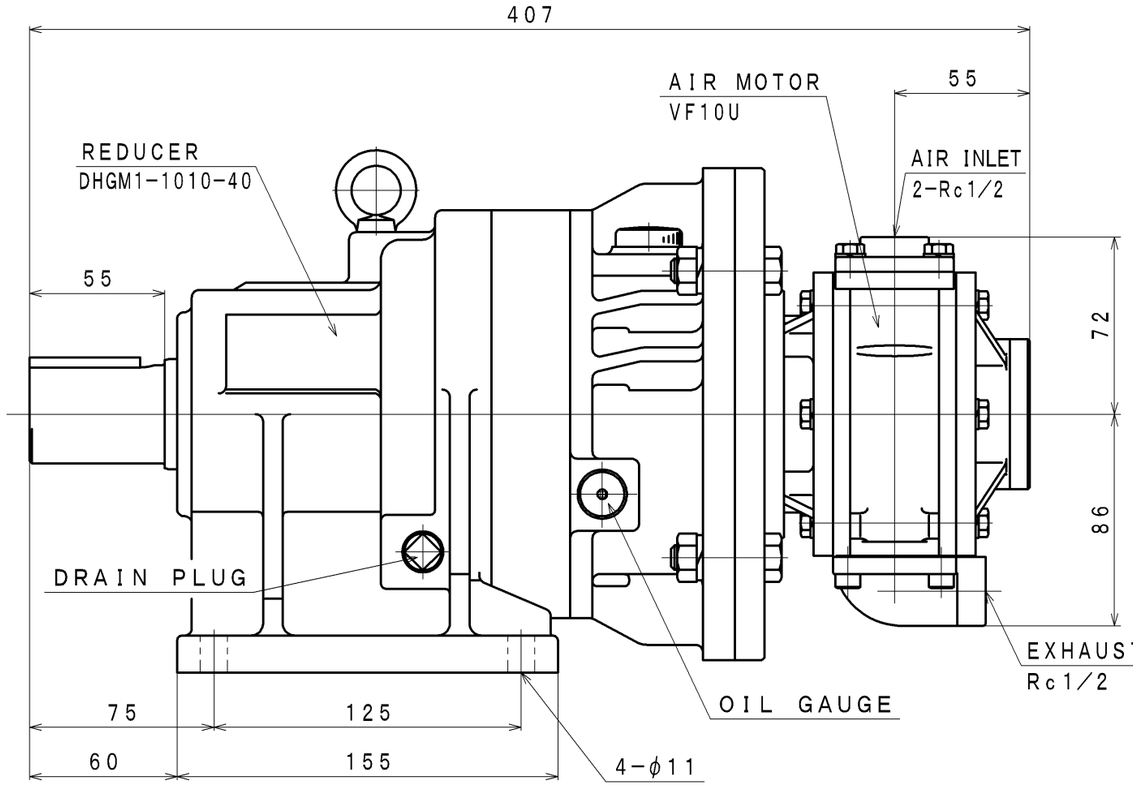

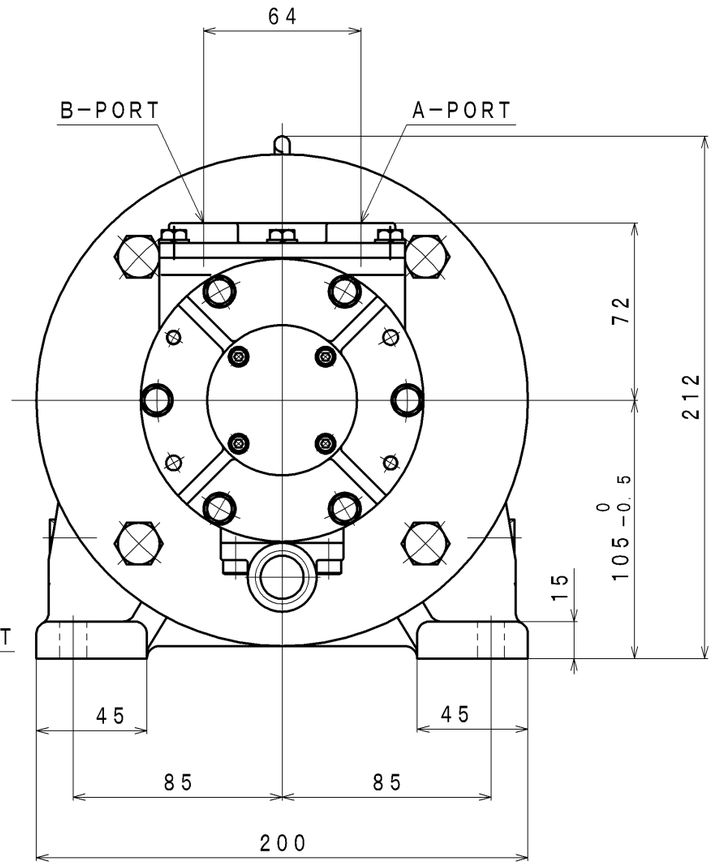

SPECIFICATION

AIR PRESSURE	AT MAXIMUM OUTPUT				※ ALLOWABLE SHAFT LOAD		LUBRICATING OIL		MASS
	OUTPUT	SPEED	TORQUE	AIR CONSUMPTION △2	RADIAL	THRUST	AIR MOTOR	REDUCER	
(MPa)	(kW)	(rpm)	(N・m)	(m^3/min (nor))	(kN)	(kN)	△1 JIS K2213-1 Turbine Oil ISO VG32 Line Oiler Dripping Quantity:4~5 drop/min	JIS K2219 Gear Oil ISO VG220 (400cc)	(kg)
0.6	1.03	70	141	1.7	5.0	–			about 28
0.5	0.87	65	128	1.5					
0.4	0.67	60	107	1.2					

※:At Mid of Shaft

APPROVED	CHECKED	REVIEWED	DRAWN	PARTICULARS	OUTLINE	DATE	SEP. 16. 2010
M. M		K. S	R. T	MODEL	VF10U-G-1010-40 AIR MOTOR	NOTE	

SAN-EI	SEIKI SEISAKUSHO CO., LTD.	DWG. NO.	E310-376 △2	SCALE 2/5