SIGN	REVISION	DATE	BY
1	Renewal	111102	R. T
2	Correction	120222	R. T
3	Renewal	160406	W. S

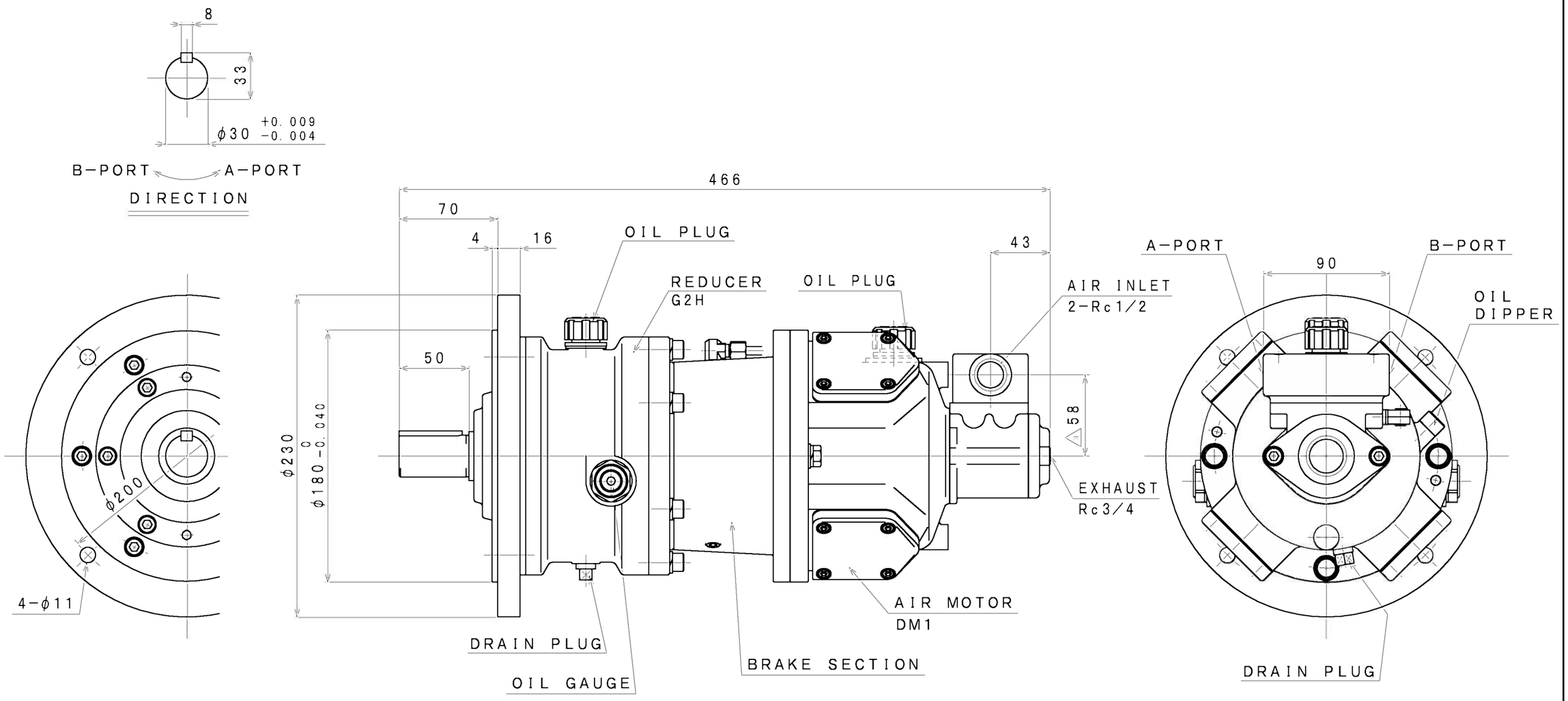

SPECIFICATION

AIR PRESSURE	AT MAXIMUM OUTPUT				※ ALLOWABLE SHAFT LOAD		LUBRICATING OIL		MASS
	OUTPUT	SPEED	TORQUE	AIR CONSUMPTION 3	RADIAL	THRUST	AIR MOTOR	REDUCER	
(MPa)	(kW)	(rpm)	(N·m)	(m^3/min (nor))	(kN)	(kN)	1		(kg)
0.6	0.75	400	17.9	0.86	2.0	0.4	JIS K2213−1 Turbine Oil ISO VG32 (140cc)	JIS K2219 Gear Oil ISO VG220 (130cc)	2 about 33
0.5	0.56	370	14.5	0.73					
0.4	0.43	340	12.2	0.53					

※:At Mid of Shaft

APPROVED	CHECKED	REVIEWED	DRAWN	PARTICULARS	OUTLINE DRAWING	DATE	JAN. 08. 2010
M. M		W. S		MODEL	DM1BG2H4F AIR MOTOR	NOTE	Z95−011

SAN−EI SEIKI SEISAKUSHO CO., LTD.

DWG. NO. E310−007 3

SCALE 1/3