SIGN	REVISION	DATE	BY
1	Renewal	111031	R. T
2	Renewal	120413	R. T
3	Renewal	160404	W. S

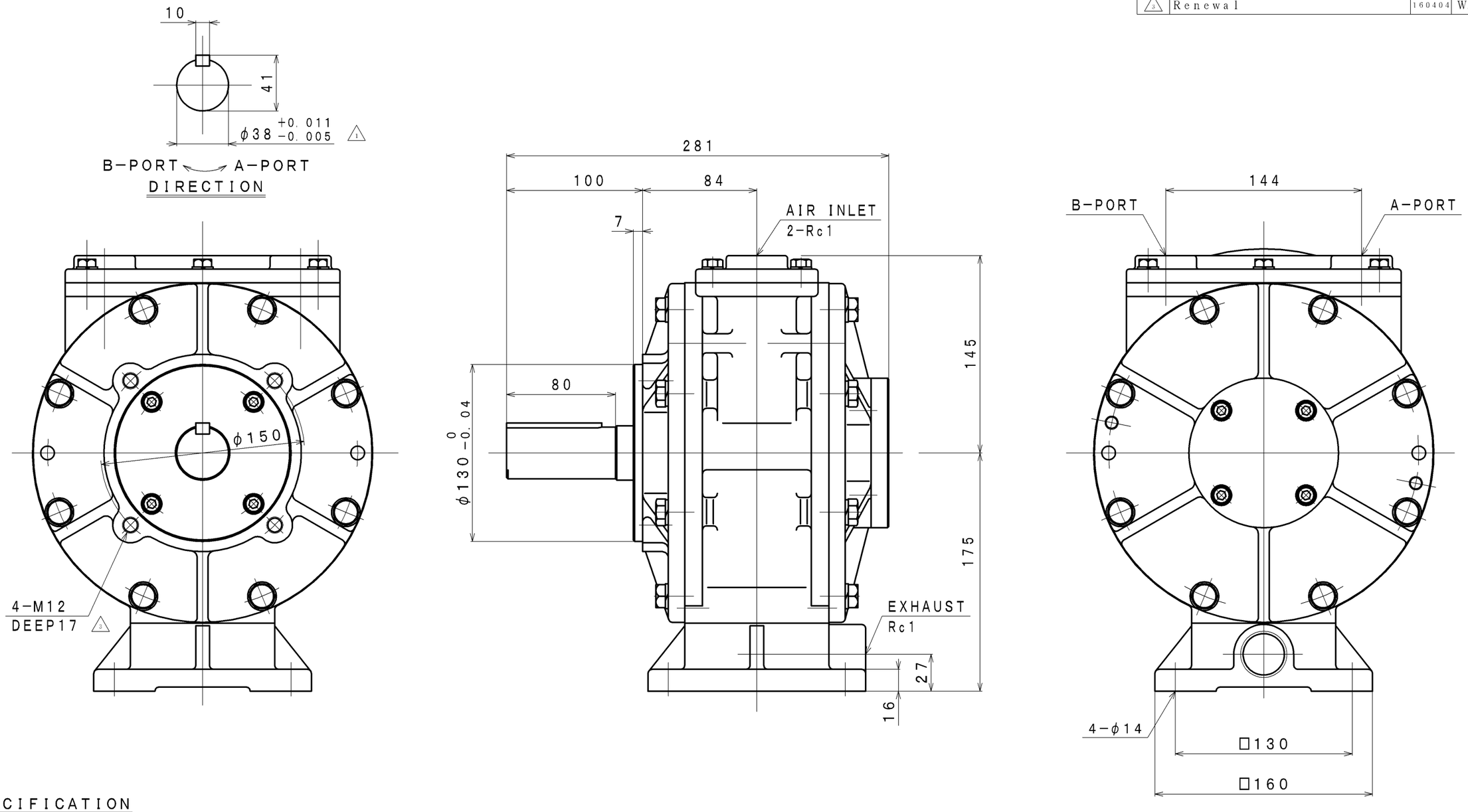

SPECIFICATION

AIR PRESSURE	AT MAXIMUM OUTPUT				※ALLOWABLE SHAFT LOAD		LUBRICATING OIL	MASS
	OUTPUT	SPEED	TORQUE	AIR CONSUMPTION 3	RADIAL	THRUST	AIR MOTOR (Line Oiler)	
(MPa)	(kW)	(rpm)	(N・m)	(m^3/min (nor))	(kN)	(kN)	1 JIS K2213−1 Turbine Oil ISO VG32 (Line Oiler Dripping Quantity:25~30 drop/min)	(kg)
0.6	8.29	1600	49.5	10.0	1.86	0.49		43.7
0.5	6.60	1400	45.0	9.0				
0.4	4.80	1200	38.2	7.4				

※:At Mid of Shaft

APPROVED	CHECKED	REVIEWED	DRAWN	PARTICULARS	OUTLINE DRAWING	DATE	Nov. 07. 2005
M. S	K. S		R. T	MODEL	VF75−UBD1	NOTE	
					AIR MOTOR	Z05−048 1	

SAN−EI SEIKI SEISAKUSYO CO., LTD.

DWG. NO. E305−218 3

SCALE 1/3